Reg. No. | | | | | | | | | | | [18MTAPT101]

FIRST SEMESTER M.TECH EXAMINATION, JANUARY 2019

GAS DYNAMICS

Time: 03 Hours **Maximum Marks:100**

Instructions : **i. Answer any five full questions. Question No. 1 and 2 are compulsory.**

ii. Draw neat sketches wherever necessary.

iii. Make suitable assumptions where necessary.

1. a. Using first and second laws of thermodynamics derive expressions for changes in entropy of constant pressure and constant volume processes for unit mass of a calorically perfect gas. **06**

b. Explain briefly the following terms with a sketch: **03**

i. Mach Wave

ii. Mach angle

iii. For a given Mach number, M, what is the Mach angle?

c. Define isentropic compressibility of a compressible fluid and show that isentropic compressibility of a perfect gas is given by $\tau_s = \frac{1}{\gamma p}$ **05**

d. Derive the relation $a^2 = \frac{\partial p}{\partial \rho}$ **06**

2. a. Write the mathematical expressions (do not derive) for integral form of continuity, momentum and energy equations for a fixed finite control volume for the case of steady, compressible inviscid flow ignoring body forces. **06**

b. Make use of the equations written for question 2a, and derive continuity, momentum and energy equations for quasi-one-dimensional flow through a variable area duct shown in Fig.2 **14**

3+6+5

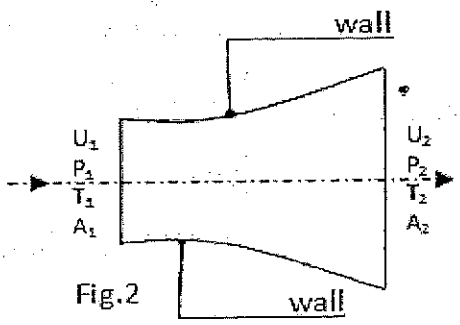

Fig.2

3. a. A converging-diverging nozzle with an area ratio of 5 is attached to a reservoir whose stagnation conditions are 800kPa and 500K. Identify the back pressure range for the four regions of nozzle operation: **12**

i. subsonic flow throughout the nozzle

ii. normal shock wave within the nozzle

iii. oblique shock wave within the lip of the nozzle, and

iv. expansion wave at the lip of the nozzle

b. Pitot tube is inserted into airflow where the static pressure is 1 atm. Calculate the flow Mach number when the Pitot tube measures **08**

i. 1.276 atm,

ii. 2.714 atm. Draw the sketches of the flowfield for cases (i) and (ii). In case (ii), a static pressure probe is inserted downstream of the Pitot tube. What is the reading of the static pressure probe?

OR

4. a. Show that in a frictionless flow the mass flow rate of a perfect gas through a variable area passage, under the assumption of quasi-1D flow is given by **06**

$$m = \frac{p_0 A}{\sqrt{T_0}}\sqrt{\frac{\gamma}{R}}\sqrt{\left(\frac{2}{\gamma-1}\right)\left[\left(\frac{p}{p_0}\right)^{2/\gamma} - \left(\frac{p}{p_0}\right)^{\frac{\gamma+1}{\gamma}}\right]}$$

Where p_0 *is the stagnation pressure at a section,* T_0 *is the stagnation temperature,* p *is the static pressure at the section, and* A *is the cross sectional area*

b. Air enters the nozzle of a Mach 2 wind tunnel with a static pressure and temperature of 671 kPa and 307.55K respectively. The measured average velocity at inlet to the nozzle is 70.3 m/s. The throat area of the nozzle is 0.1 m^2. Find the area, velocity and static pressure of air at test section. **07**

c. Consider two flows one of helium and one of air at the same Mach number of 5. Denoting the strength of a normal shock by the static pressure ratio across the shock, which gas will result in the stronger shock? $\gamma_{Helium} = 1.67, \gamma_{air} = 1.4$ **07**

5. a. Consider a supersonic flow with an upstream Mach number of 3 and pressure of 1atm. This flow is first expanded around an expansion corner with $\theta=20^0$, and then compressed through corner with equal angle $\theta=20^0$ so that it is returned to its original direction. Calculate the Mach number and pressure downstream of the compression corner. **12**

b. Expansion wave is a strong mechanism for turning a supersonic flow through a large deflection angle. Starting from a horizontal sonic flow, the Prandtl-Meyer function gives the angle through which the flow can be deflected or turned. The Prandtl-Meyer function is **08**

$$\nu(M) = \left(\sqrt{\frac{\gamma+1}{\gamma-1}}\right)\tan^{-1}\sqrt{\frac{\gamma-1}{\gamma+1}(M^2-1)} - \tan^{-1}\sqrt{M^2-1}$$

Estimate the theoretical maximum angle through which an initial sonic flow of air can be turned. Sketch the flowfield.

OR

6. a. Given that the governing equation of Pandtl-Meyer flow is $d\theta=\sqrt{(M^2-1)}(dV/V)$, show that for a calorically perfect gas: **08**

$$\theta_2 - \theta_1 = \int_{M_1}^{M_2} \frac{\sqrt{M^2-1}}{1+\frac{\gamma-1}{2}M^2}\frac{dM}{M}$$

b. Consider a 15^0-half angle wedge shown in figure below: **12**

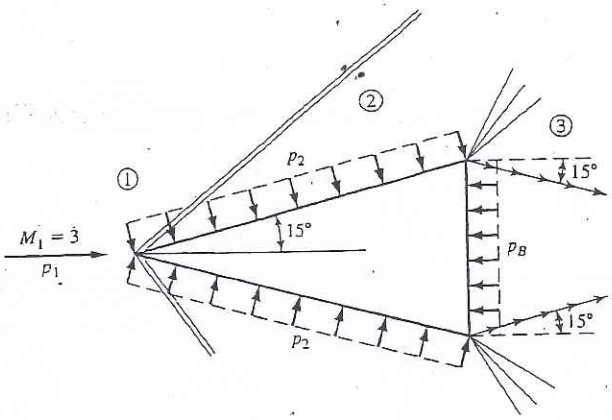

Assume that (i) the flow separates at the corners, with the streamlines trailing downstream of the corner deflected toward the base at an angle of 15^0 from the horizontal and (ii) the base pressure p_B is the arithmetic average between the pressure downstream of the expansion waves, p_3 and the freestream pressure p_1. Calculate the drag coefficient of the wedge.

7. a. In the method of characteristics, explain unit processes for internal, wall and downstream of shock points. **10**

b. Explain the method of flow visualization using shadow method with a sketch. **10**

OR

8. a. In the method of characteristics applied to 2-D steady supersonic, inviscid, irrotational flow, explain the equations for the slopes of the characteristic lines. Illustrate with a sketch (Derivation not required). **04**

b. Briefly explain compatibility equations valid on the respective characteristic lines, referred in 8a. **06**

c. Explain with a neat sketch construction of a total temperature probe used in high speed flows with thermocouple as sensing element. **10**